SFKI QF30

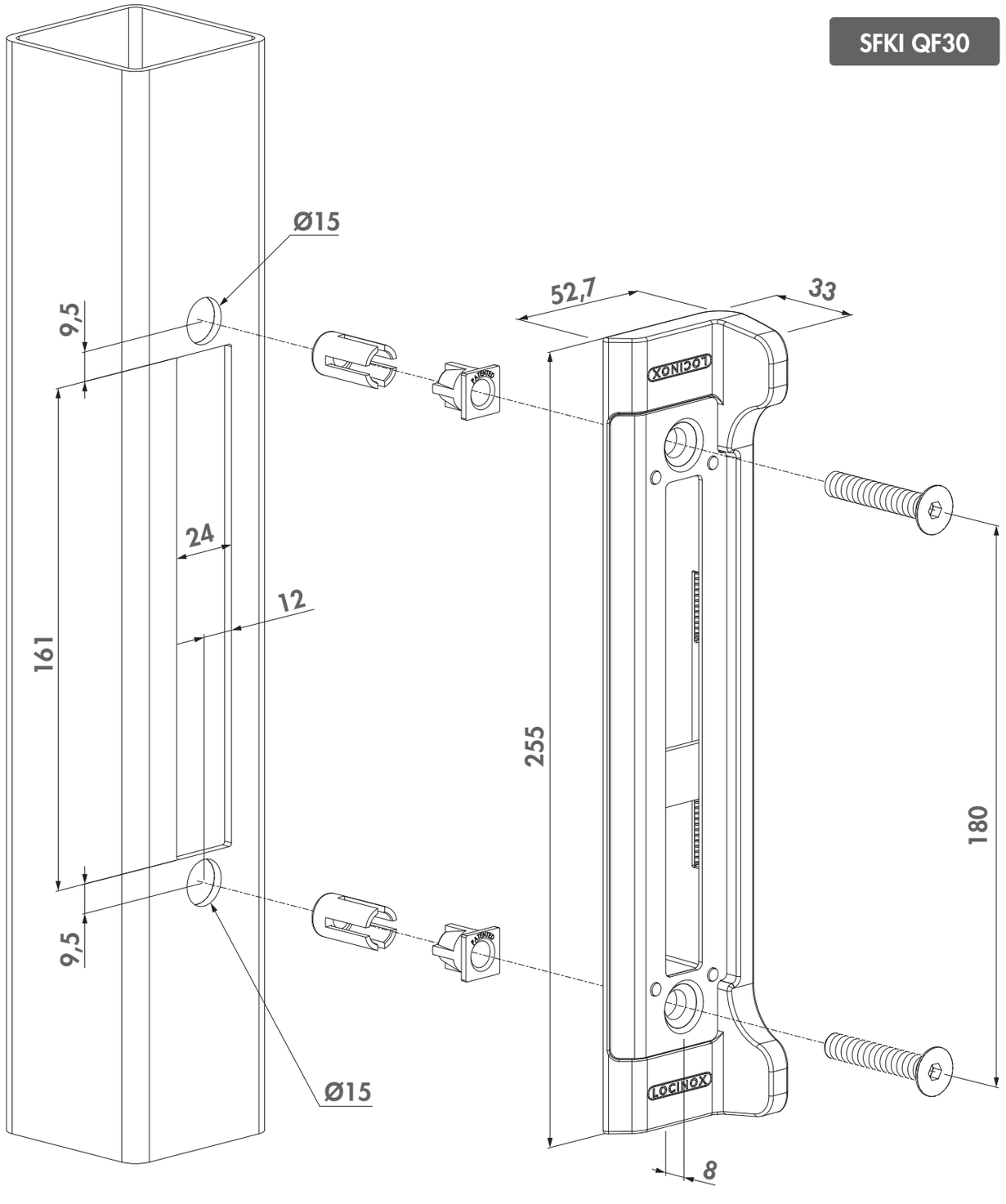
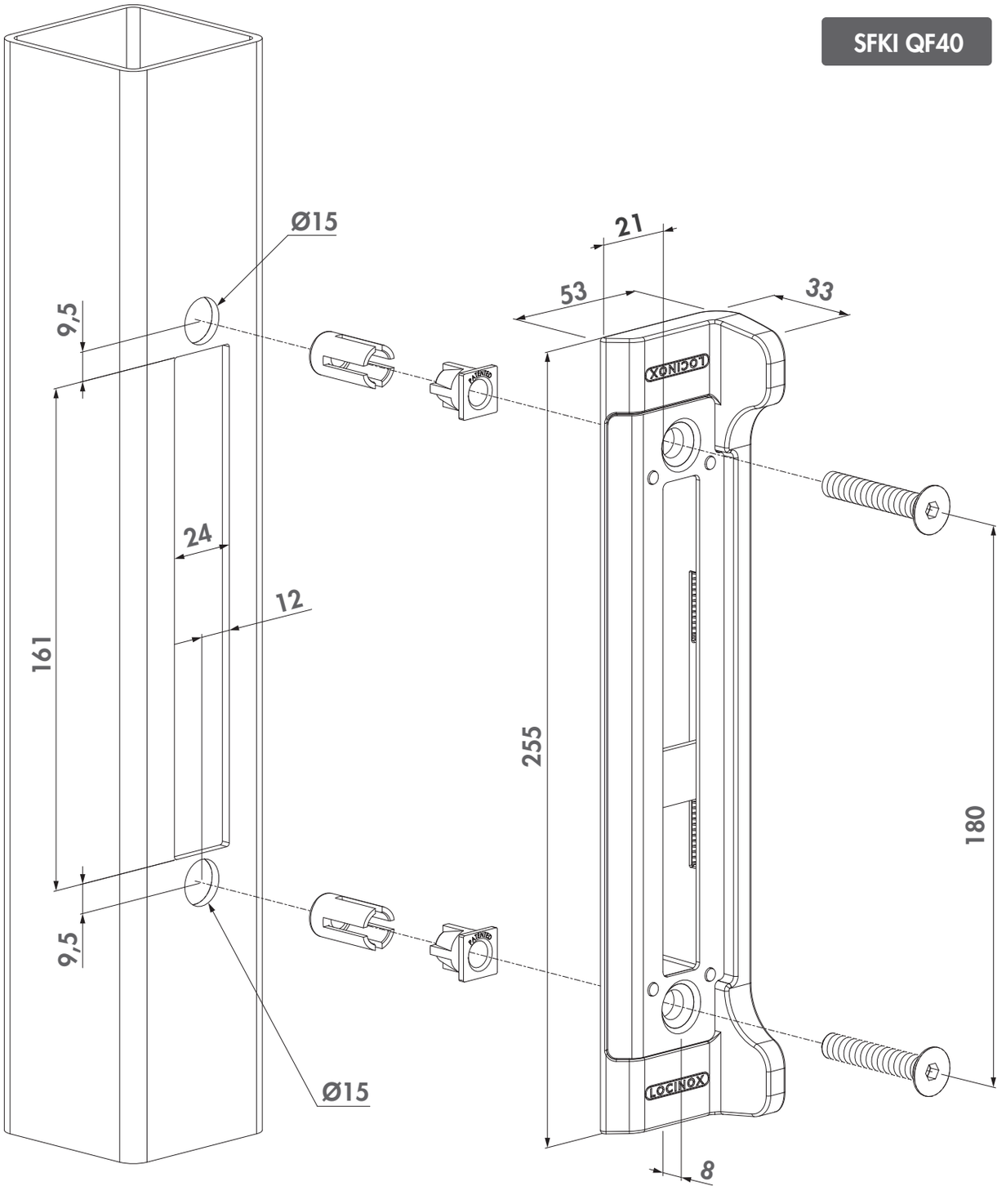
SFKI QF40